Index

Page	Schematics Page Name
01	Cover Sheet / Revision History
02	Top Level
03	Input
04	Phase
05	Output
06	Miscellaneous

01_Revision_History.SchDoc

Revision History

Rev.	Rel.	Date	Author	Description	Page(s)
0.0.1	E1	2025-10-03	EF	- Initial design, based on RIC70847EVAL1 E6	6

RIC70849EVALE1

Default_Assembly

E1

IR HiRel
An Infineon Technologies Company

IR HiRel Products

PSS HIREL SM SYS

35 New England Business Ctr Dr, Andover, MA 01810

06/2026

Top Leve
Top Level.SchDoc

LEGAL DISCLAIMER
THE INFORMATION GIVEN IN THIS DOCUMENT IS GIVEN FOR ILLUSTRATING PURPOSES ONLY. THE RECIPIENT OF THIS DOCUMENT MUST VERIFY ANY FUNCTION DESCRIBED HEREIN IN THE REAL APPLICATION. INFINEON TECHNOLOGIES HEREBY DISCLAIMS ANY AND ALL WARRANTIES AND LIABILITIES OF ANY KIND (INCLUDING WITHOUT LIMITATION WARRANTIES OF NON-INFRINGEMENT OF INTELLECTUAL PROPERTY RIGHTS OF ANY THIRD PARTY) WITH RESPECT TO ANY AND ALL INFORMATION GIVEN IN THIS DOCUMENT.

IR HiRel
An Infineon Technologies Company

IR HiRel Products
PSS HIREL SM SYS
35 New England Business Ctr Dr, Andover, MA 01810

Title	RIC70849EVALE1		
Variant	Default_Assembly	Approved	<Appr.>
Size: A3	Document Name: 01_Revision_History.SchDoc	Rel.: MA	Rev.: E1

Author: Manuel Alva
Date: 6/22/2026 Time: 6:21:49 PM SVN Revision: Not in version control
© Infineon Technologies AG 2025. All Rights Reserved. Sheet of

Input.SchDoc

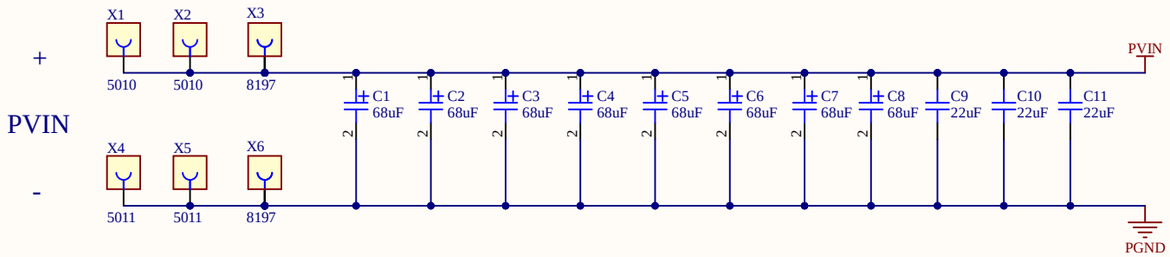

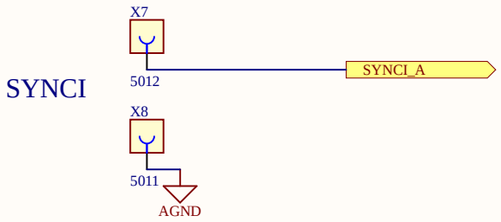

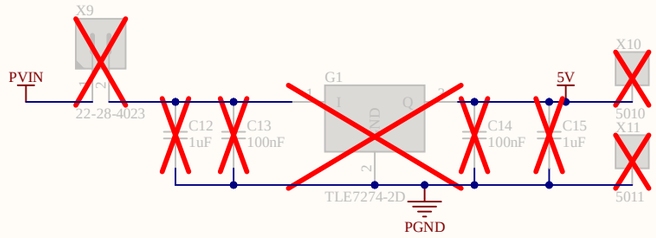

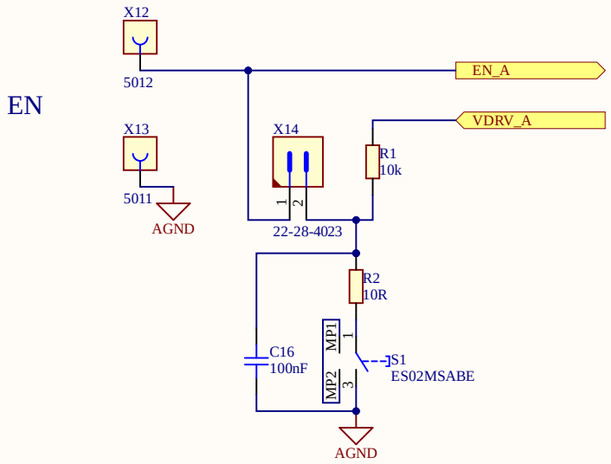

IR HiRel Products
PSS HIREL SM SYS
35 New England Business Ctr Dr, Andover, MA 01810

Title	RIC70849EVALE1		
Variant	Default_Assembly	Approved	<Appr.>
Size: A3	Document Name: Input.SchDoc	Rel. MA	Rev. E1

Author: Manuel Alva
Date: 6/22/2026 Time: 6:21:49 PM SVN Revision: Not in version control
© Infineon Technologies AG 2025. All Rights Reserved. Sheet of

Miscellaneous.SchDoc

Fiducial Markers

E1 E2 E3 E4

MP1 9434

MP2 9434

MP3 9434

MP4 9434

MP5 1903C

MP6 1903C

MP7 1903C

MP8 1903C

X44 X45

X46 X47

X48 X49

X50 X51

X52

IR HiRel Products
PSS HIREL SM SYS
An Infineon Technologies Company
35 New England Business Ctr Dr, Andover, MA 01810

Title	RIC70849EVALE1		
Variant	Default_Assembly	Approved	<Appr.>
Size: A3	Document Name: Miscellaneous.SchDoc	Rel. MA	Rev. E1
Author: Manuel Alva			
Date: 6/22/2026 Time: 6:21:49 PM	SVN Revision: Not in version control		

© Infineon Technologies AG 2025. All Rights Reserved.
Sheet of

Output.SchDoc

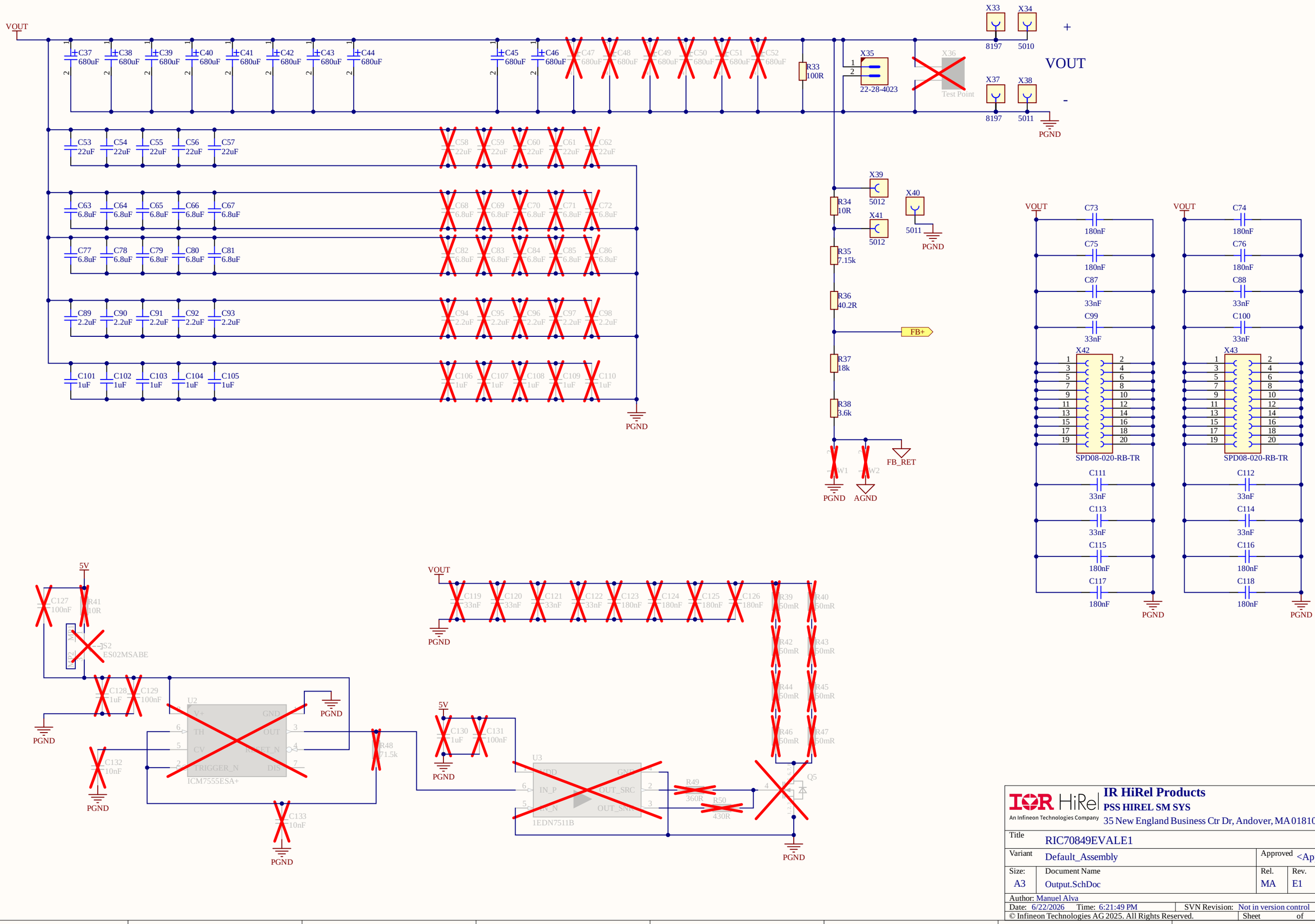

IR HiRel Products	PSS HIREL SM SYS
An Infineon Technologies Company	35 New England Business Ctr Dr, Andover, MA 01810
Title	RIC70849EVALE1
Variant	Default_Assembly
Approved	<Appr.>
Size: A3	Document Name: Output.SchDoc
Rel.	MA
Rev.	E1
Author:	Manuel Alva
Date:	6/22/2026
Time:	6:21:49 PM
SVN Revision:	Not in version control
Sheet	of

© Infineon Technologies AG 2025. All Rights Reserved.

Phase.SchDoc

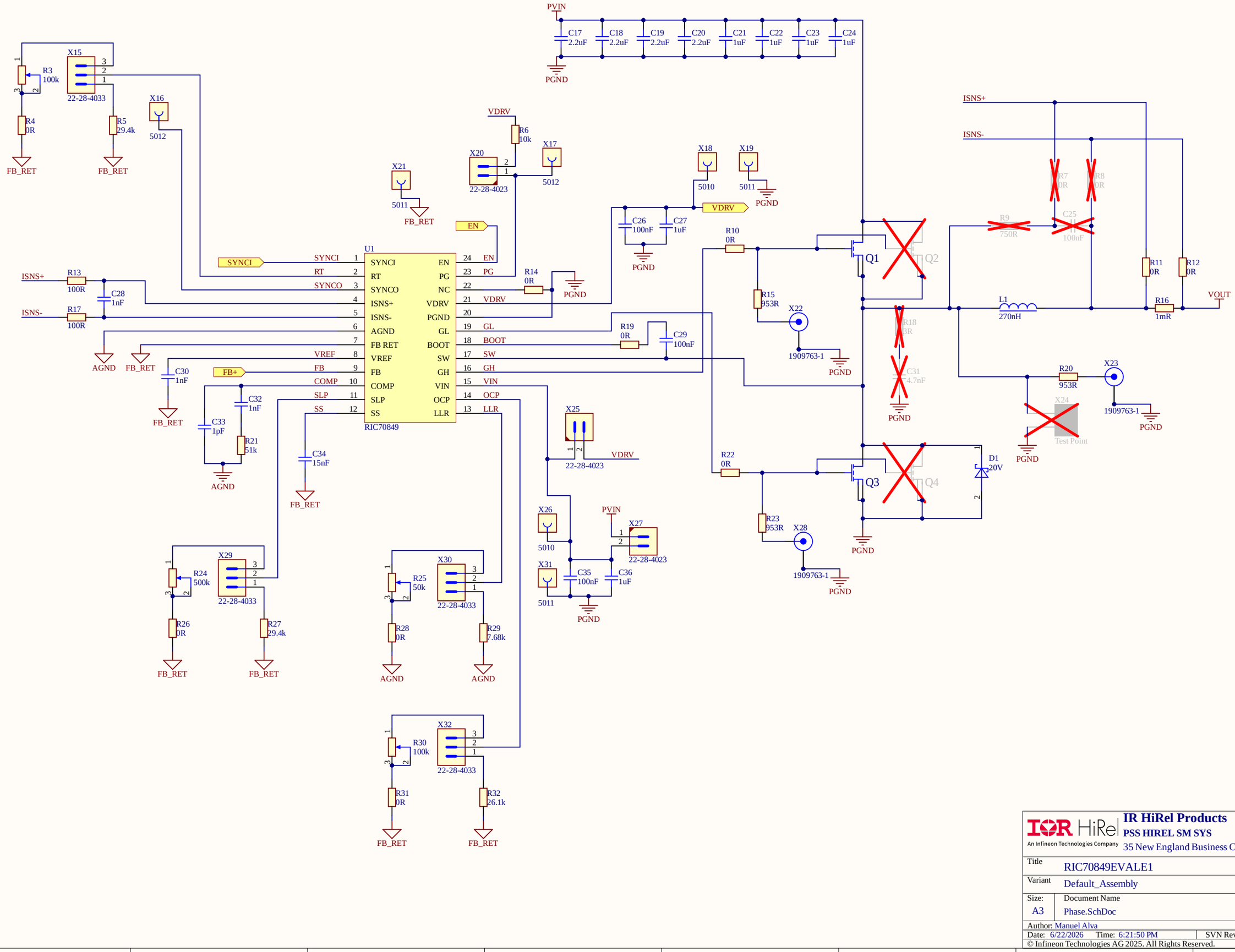

IR HiRel Products
PSS HIREL SM SYS
An Infineon Technologies Company
35 New England Business Ctr Dr, Andover, MA 01810

Title	RIC70849EVALE1		
Variant	Default_Assembly	Approved	<Appr.>
Size: A3	Document Name: Phase.SchDoc	Rel. MA	Rev. E1
Author: Manuel Alva			
Date: 6/22/2026 Time: 6:21:50 PM	SVN Revision: Not in version control		
© Infineon Technologies AG 2025. All Rights Reserved.	Sheet of		

Top Level.SchDoc

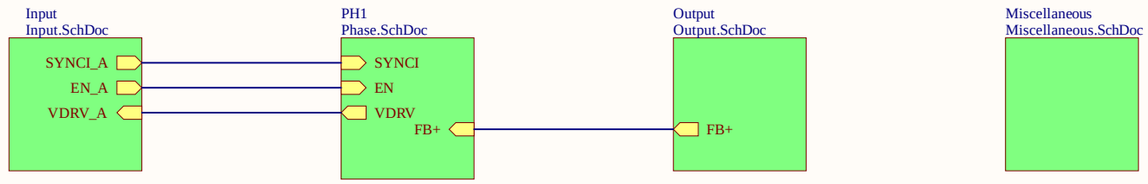

IR HiRel Products
PSS HIREL SM SYS
An Infineon Technologies Company
35 New England Business Ctr Dr, Andover, MA 01810

Title	RIC70849EVALE1		
Variant	Default_Assembly	Approved	<Appr.>
Size: A3	Document Name: Top Level.SchDoc	Rel.: MA	Rev.: E1

Author: Manuel Alva
Date: 6/22/2026 Time: 6:21:50 PM SVN Revision: Not in version control
© Infineon Technologies AG 2025. All Rights Reserved. Sheet of

IR HiRel
An Infineon Technologies Company

IR HiRel
An Infineon Technologies Company

PSS HIREL SM SYS

RIC70849EVALE1

Application Board

EASY 12345 E1 06/2026

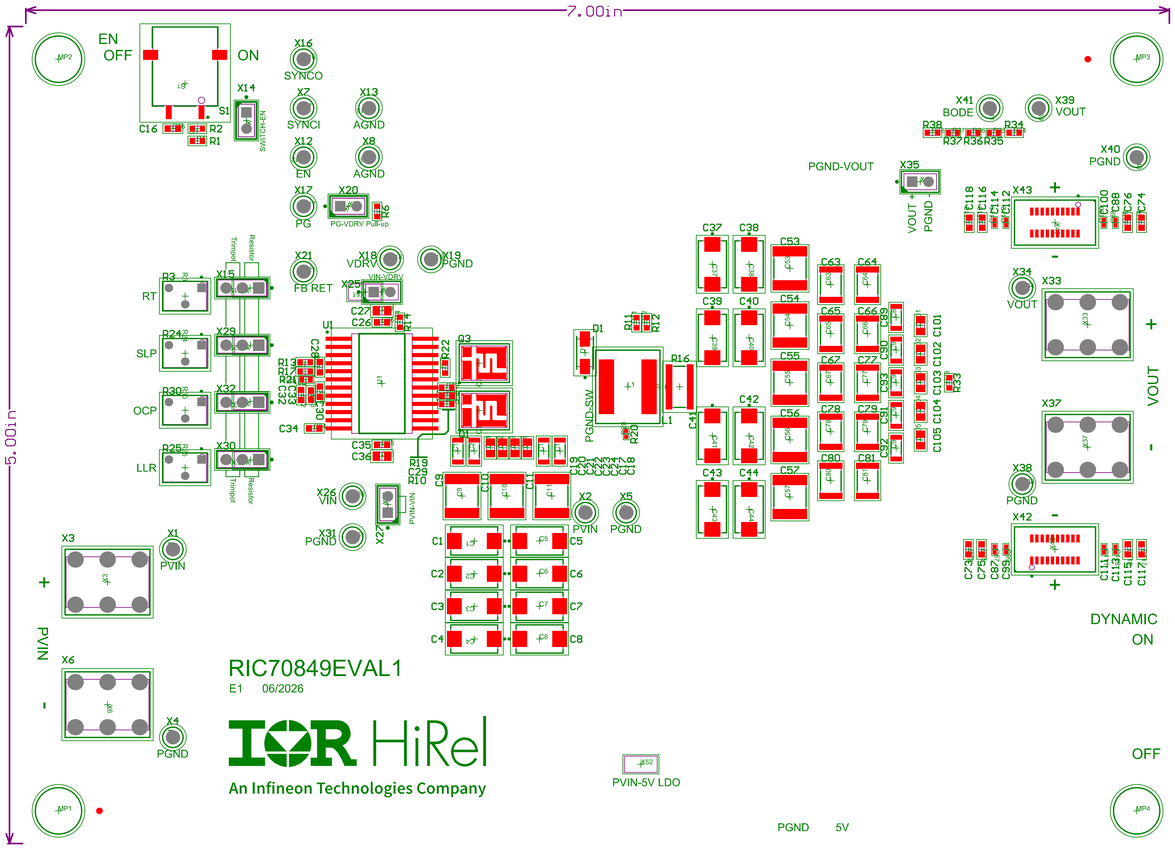

IR HiRel Products PSS HIREL SM SYS 101 N Pacific Coast Highway El Segundo, CA 90245	ENGINEER:	TITLE: RIC70849EVALE1	
	PCB DESIGNER: Manuel Alva		
	DATE: 6/22/2026	PART NO.:	REL: E1 / REV: E1
	SVN REVISION: Not in version control	FILE NAME: PCB2.PcbDoc	APRV: MA / SCALE: 1:1

© . Infineon Technologies AG 2025. All Rights Reserved.

Layer	Name	Material	Thickness	Constant
	Top Overlay			
	Top Solder	Solder Resist	0.40mil	3.5
1	L1_Top		2.76mil	
	Dielectric 1	PP-006	6.00mil	4.1
2	L2_Mid-Layer 1	CF-004	2.76mil	
	Core	FR-4	39.00mil	4.5
3	L3_Mid-Layer 2	CF-004	2.76mil	
	Dielectric 2	PP-006	6.00mil	4.1
4	L4_Bottom		2.76mil	
	Bottom Solder	Solder Resist	0.40mil	3.5
	Bottom Overlay			

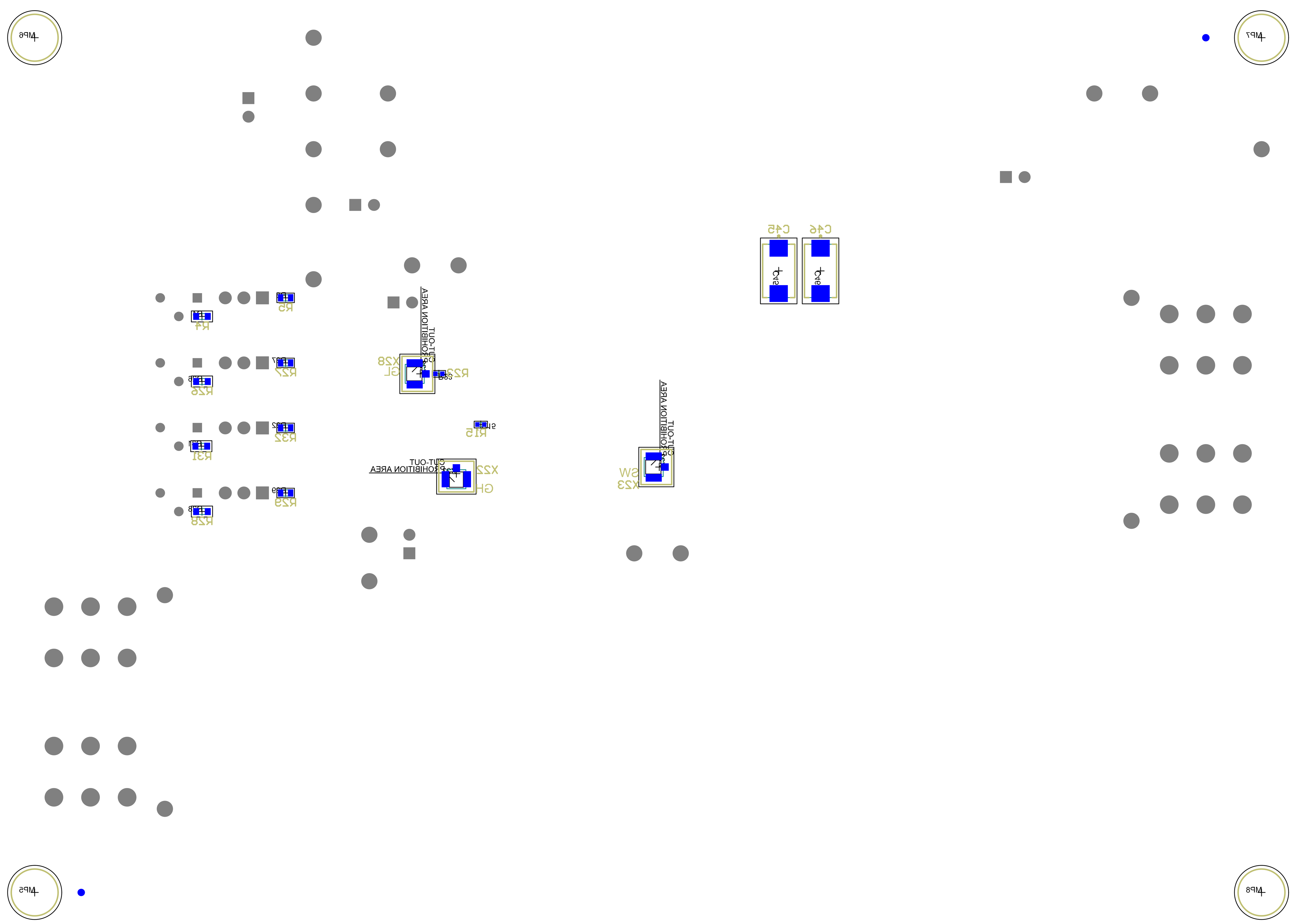

An Infineon Technologies Company

IR HiRel Products
PSS HIREL SM SYS
101 N Pacific Coast Highway
El Segundo, CA 90245

ENGINEER:	
PCB DESIGNER:	Manuel Alva
DATE:	6/22/2026
SVN REVISION:	Not in version control
TITLE:	RIC70849EVALE1
PART NO.:	
REL:	E1
REV:	E1
FILE NAME:	PCB2.PcbDoc
APRV:	MA
SCALE:	1:1

© Infineon Technologies AG 2025. All Rights Reserved.